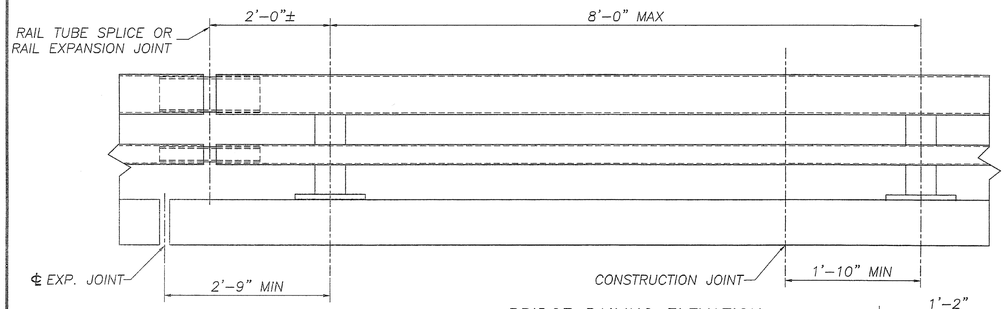

BRIDGE RAILING ELEVATION

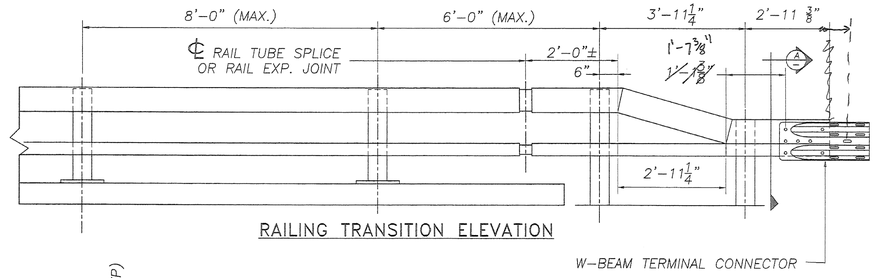

RAILING TRANSITION ELEVATION

NOTES:

1. ALL RAILINGS AND MATERIALS SHALL CONFORM TO THE PROVISION OF SECTION 525
2. PRIOR TO GALVANIZING, ALL EXPOSED CUT OR SHEARED EDGES SHALL BE ROUNDED TO A 1/16" RADIUS AND BE FREE OF BURRS.
3. RAIL POSTS SHALL BE SET NORMAL TO GRADE.
4. SECTIONS OF RAIL TUBE SHALL BE ATTACHED TO A MINIMUM OF TWO (2) RAIL POSTS AND PREFERABLY TO AT LEAST FOUR (4) POSTS.
5. RAIL TUBE EXPANSION JOINT SHALL BE PROVIDED IN ANY RAIL BAY SPANNING A SUPERSTRUCTURE EXPANSION JOINT. EXPANSION JOINT WIDTH SHALL BE "X" AT 45°F AND WILL BE ADJUSTED IN THE FIELD BY THE ENGINEER FOR OTHER TEMPERATURES.
6. ALL PARTS SHALL BE GALVANIZED AFTER FABRICATION IN ACCORDANCE WITH AASHTO M111, EXCEPT HARDWARE, WHICH SHALL MEET THE REQUIREMENTS OF AASHTO M232.
7. RAIL POST ANCHORING NUTS SHALL BE TIGHTENED TO A SNUG FIT AND GIVEN AN ADDITIONAL ONE-EIGHTH TURN.
8. RAIL TUBES SHALL BE ATTACHED USING 3/4" FULL DIAMETER BODY AASHTO M164 (TYPE 1) ROUND HEAD BOLT INSERTED THROUGH THE FACE OF THE TUBE. HOLES IN POSTS SHALL BE 1/16" LARGER THAN THE BOLT SIZE.
9. HOLES IN RAILS FOR RAIL TUBE ATTACHMENT MAY BE FIELD-DRILLED. HOLES SHALL BE COATED WITH AN APPROVED ZINC-RICH PAINT PRIOR TO ERECTION.
10. ANY BENDING OF RAIL SHALL BE BY SHOP PROCEDURE ONLY.
11. THE FABICATOR SHALL SUBMIT SHOP DRAWINGS, INCLUDING WELDING PROCEDURES TO THE STRUCTURES SECTION FOR APPROVAL IN ACCORDANCE WITH SUBSECTION 525.03. ALL WELDING SHALL CONFORM WITH SUBSECTION 506.10.
12. RAIL POSTS AND BASE PLATES SHALL BE TESTED FOR IMPACT PROPERTIES IN ACCORDANCE WITH ASTM A-370 CHARPY IMPACT TESTING USING TYPE A SPECIMEN.

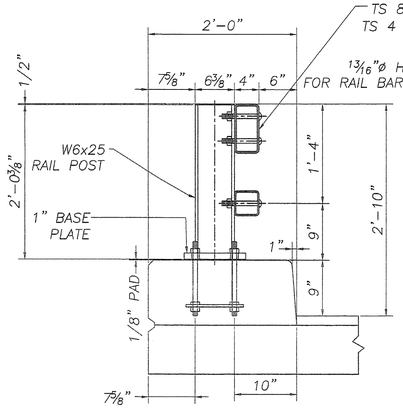

TYPICAL SECTION

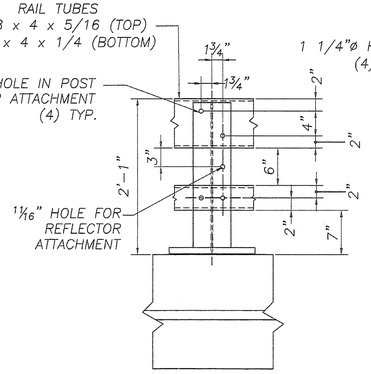

ELEVATION

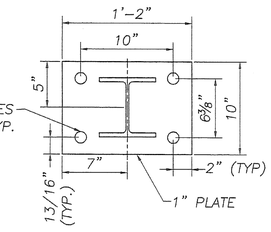

POST AND BASE PLATE

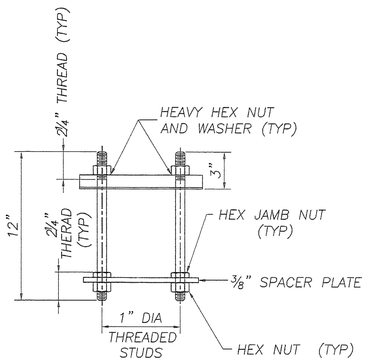

RAIL AND POST ANCHORAGE

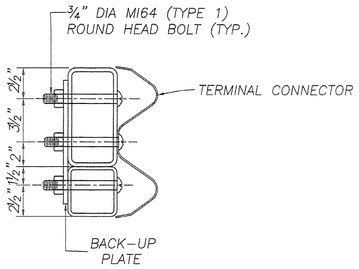

A SECTION

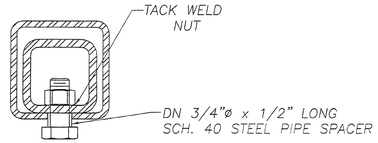

5/8"ø TAPPED HOLE IN SPLICE TUBE AND 1 1/8" x 'C' SLOT IN RAIL TUBE FOR BOLT AND PLAIN HARDENED WASHER

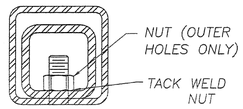

5/8"ø TAPPED HOLE IN SPLICE TUBE & 3/4"ø HOLE IN RAIL TUBE FOR BOLT & PLAIN HARDENED WASHER

EXPANSION JOINT SECTION

FOR DETAILS NOT SHOWN, SEE "RAIL TUBE SPLICE SECTION."

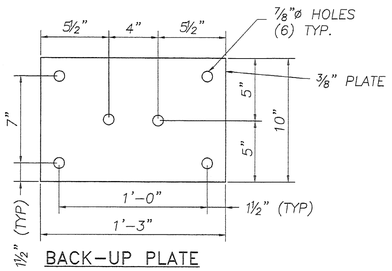

BACK-UP PLATE

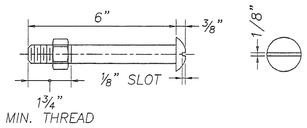

3/4" DIA. M164 (TYPE 1)
ROUND HEAD BOLT

(WITH WASHER AND PREVAILING TORQUE TYPE LOCK NUT)
(SEE NOTE #9)
ONLY FULL DIAMETER BODY BOLTS WILL BE ALLOWED.

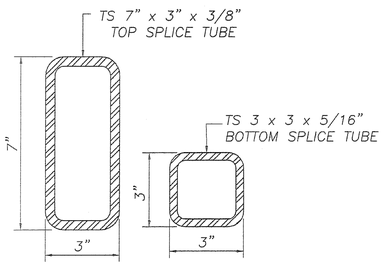

RAIL TUBE SPLICE SECTION

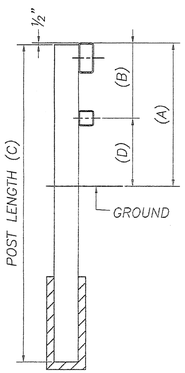

TYPICAL SECTION

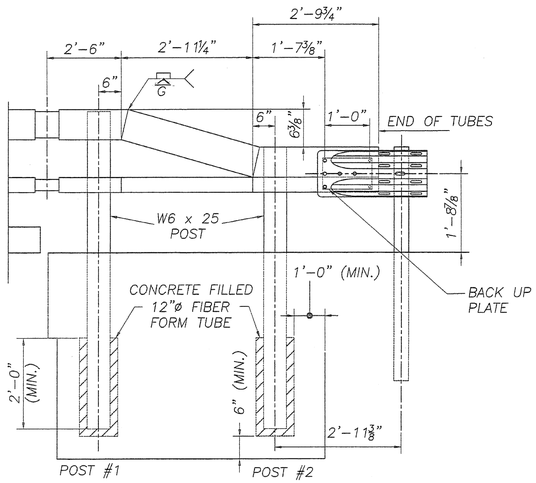

ELEVATION

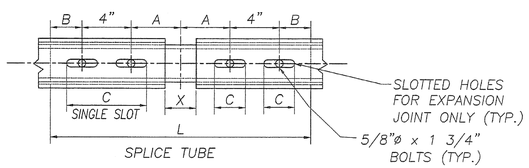

RAIL TUBE SPLICE AND RAIL EXPANSION JOINT DETAIL

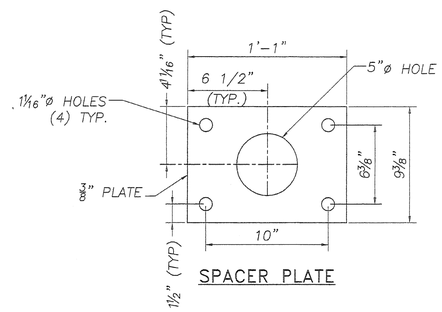

SPACER PLATE

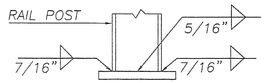

BASE WELD DETAIL

MATERIALS
RAIL TUBES.....ASTM A500, GRADE B OR ASTM A501
RAIL POSTS AND BASE PLATES.....ASTM A709A709M, GRADE 50 — SP
AALL OTHER SHAPRE AND PLATES.....ASTM A709/A709M, GARDE 36
ANCHOR STUDS.....ASTM A449
ALL OTHER BOLTS (UNLESS NOTED).....AASHTO M164, TYPE1 — SP

NUTS FOR AASHTO M164 BOLTS AND FOR ANCHOR STUDS SHALL COMPLY WITH AASTHO M291 (ASTM A563).

WASHERS SHALL COMPLY WITH AASHTO M293 (ASTM F436) SPECIFCATIONS.

1/8" PAD SHALL COMPLY WITH STANDARD SPECIFICATION SUBSECTION 731.01 OR 731.02.

POST NUMBER	RAIL HEIGHT (A)	RAIL SPACING (B)	POST LENGTH (C)	RAIL HEIGHT (D)
1	2'-10"	1'-4"	7'-0"	1'-6"
2	2'-3 5/8"	10"	6'-5"	1'-5 5/8"

SPLICE TABLE					
T	A	B	C	L	X
N/A	4"	2"	--	20"	3/4"
EXPANSION JOINT TABLE					
<4"	4"	2"	2 1/2"	20"	2 1/2"

T = TOTAL MOVEMENT BETWEEN BRIDGE EXPANSION JOINTS. SEE NOTE 6

REVISIONS		
No.	Remarks	Date
0	Initial submittal	2/4/09

RECEIVED
SGS
AS NOTED
2/11/09

HIGHWAY SAFETY CORP.
GLASTONBURY, CT

ITEM 525.33 - BRIDGE RAILING-NETC 2 RAIL
PROJECT No. ER ST 0271(16)
TOWN OF CANAAN COUNTY OF ESSEX
ROUTE No. VT 102
BRIDGE NO. : 16

DRAWN	RWL
CHECKED	P Radice
DATE	2/2/09
SCALE	NONE
HSC REFERENCE NO.	1684
SIZE	D
REVISION	0
SHEET NO.	2 of 2
GENERAL CONTRACTOR	
SUB CONTRACTOR	F.R. LAFAYETTE, INC.